HAHNGROUP

advanced automation

A Software Defined Journey ´15-´19

Frankfurt, Oct. 29th

HAHN AUTOMATION · GeKu · Invotec ENGINEERING, INC. · KITOV SYSTEMS · rethink robotics · HAHN ROBOTICS · HAHN ROBSHARE · waldorf technik · WALTHER SYSTEMTECHNIK · WEMO

The HAHN Group

...combines a network of specialized companies for

Industrial automation and robotic solutions

...is **globally present**

...employs **1.500 people** and

... has **27 IT-locations.**

HAHN AUTOMATION · GeKu · Invotec · KITOV SYSTEMS · rethink robotics · HAHN ROBOTICS · HAHN ROBSHARE · waldorf technik · WALTHER SYSTEMTECHNIK · WEMO

Divisions

HAHNGROUP
advanced automation

Assembly & Test

Automotive

Consumer

Medical

Med Tech

Electronics

HAHN AUTOMATION

DFT maschinenbau gmbh

Invotec

Material Handling

WEMO

waldorf technik

GeKu

Robotics

HAHN ROBOTICS

HAHN ROBSHARE

rethink robotics

Process Technologies

KITOV SYSTEMS

WALTHER SYSTEMTECHNIK

HAHN DIGITAL

HAHN AUTOMATION | DFT maschinenbau gmbh | GeKu | Invotec ENGINEERING, INC. | KITOV SYSTEMS | rethink robotics | HAHN ROBOTICS | HAHN ROBSHARE | waldorf technik | WALTHER SYSTEMTECHNIK | WEMO

Top IAS companies worldwide

HAHNGROUP
advanced automation

#12 in turnover

The HAHN Group is the **fastest growing integrated assembly solutions** company worldwide with

23% growth

Prel. 33% growth 2018

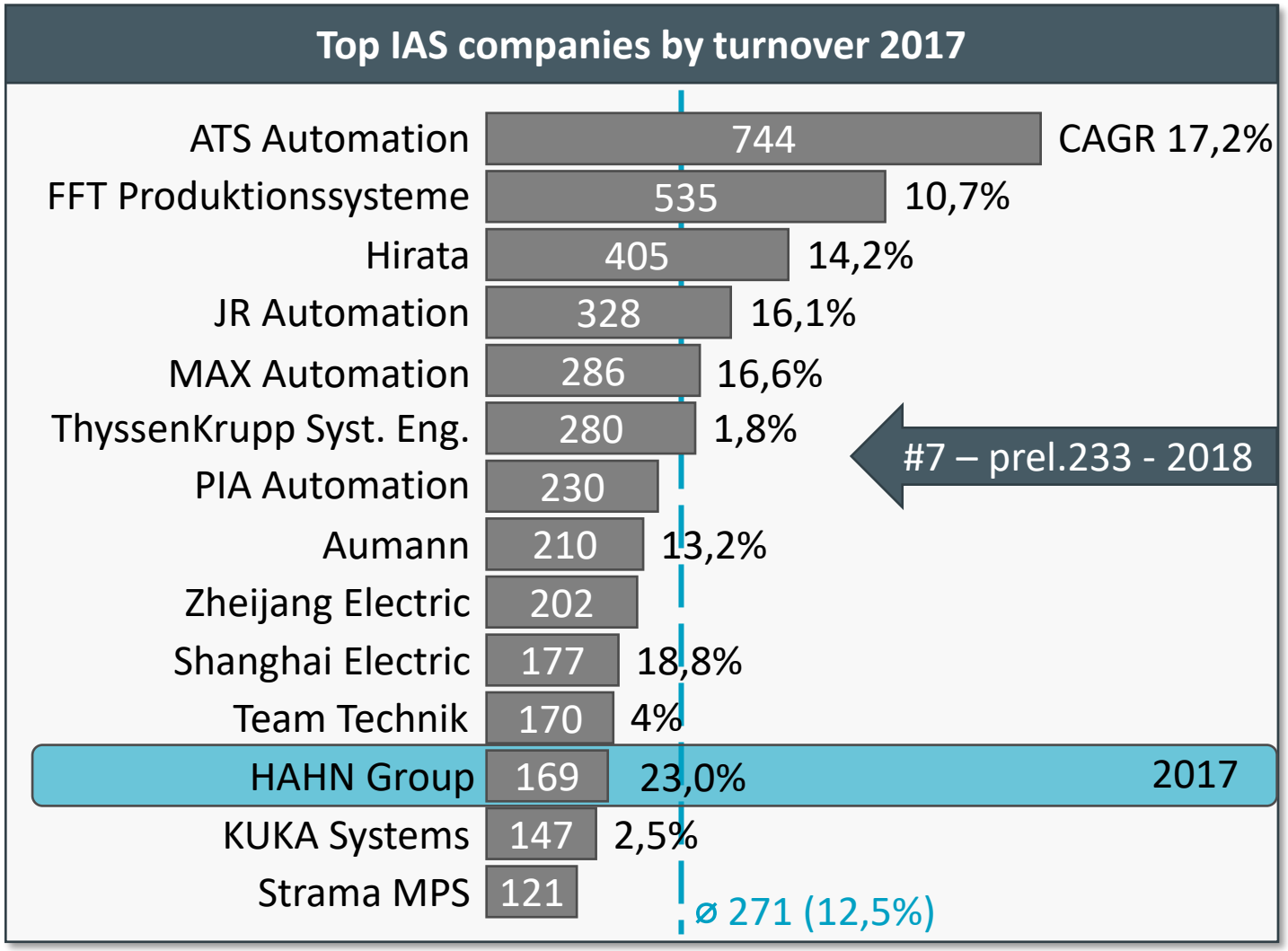

HAHNGROUP
advanced automation

Taking the Challenge

HAHN AUTOMATION · GeKu · Invotec · KITOV SYSTEMS · rethink robotics · HAHN ROBOTICS · HAHN ROBSHARE · waldorf technik · WALTHER SYSTEMTECHNIK · WEMO

Initial „New“ Platform Targets

HAHNGROUP
advanced automation

- Integrate global backup
- Allow isolated physical instances
- Leverage storage efficiency
- Utilize hyperconverged effects for backup data streaming
- Online failover redundant cluster setup

- Install about net capacity 70 TB
- Support snapshots and snapshot exports
- Suppot flexible access protocols
- Achive 20% deduplication
- Achive 8% compression
- ZFS partition tolerance

April `15 New HCI Concept

HAHNGROUP
advanced automation

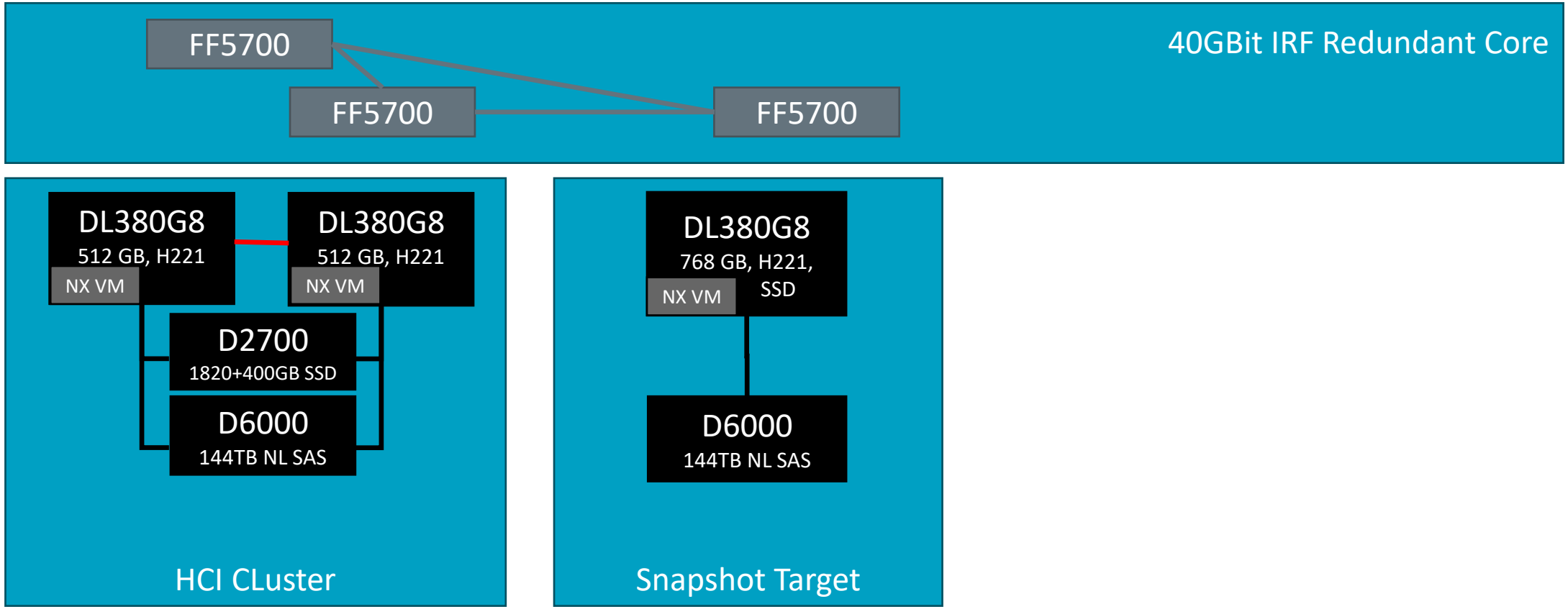

HAHN AUTOMATION GeKu Invotec KITOV SYSTEMS rethink robotics HAHN ROBOTICS HAHN ROBSHARE waldorf technik WALTHER SYSTEMTECHNIK WEMO

August `15 Additional Workload – Scale Out

HAHNGROUP
advanced automation

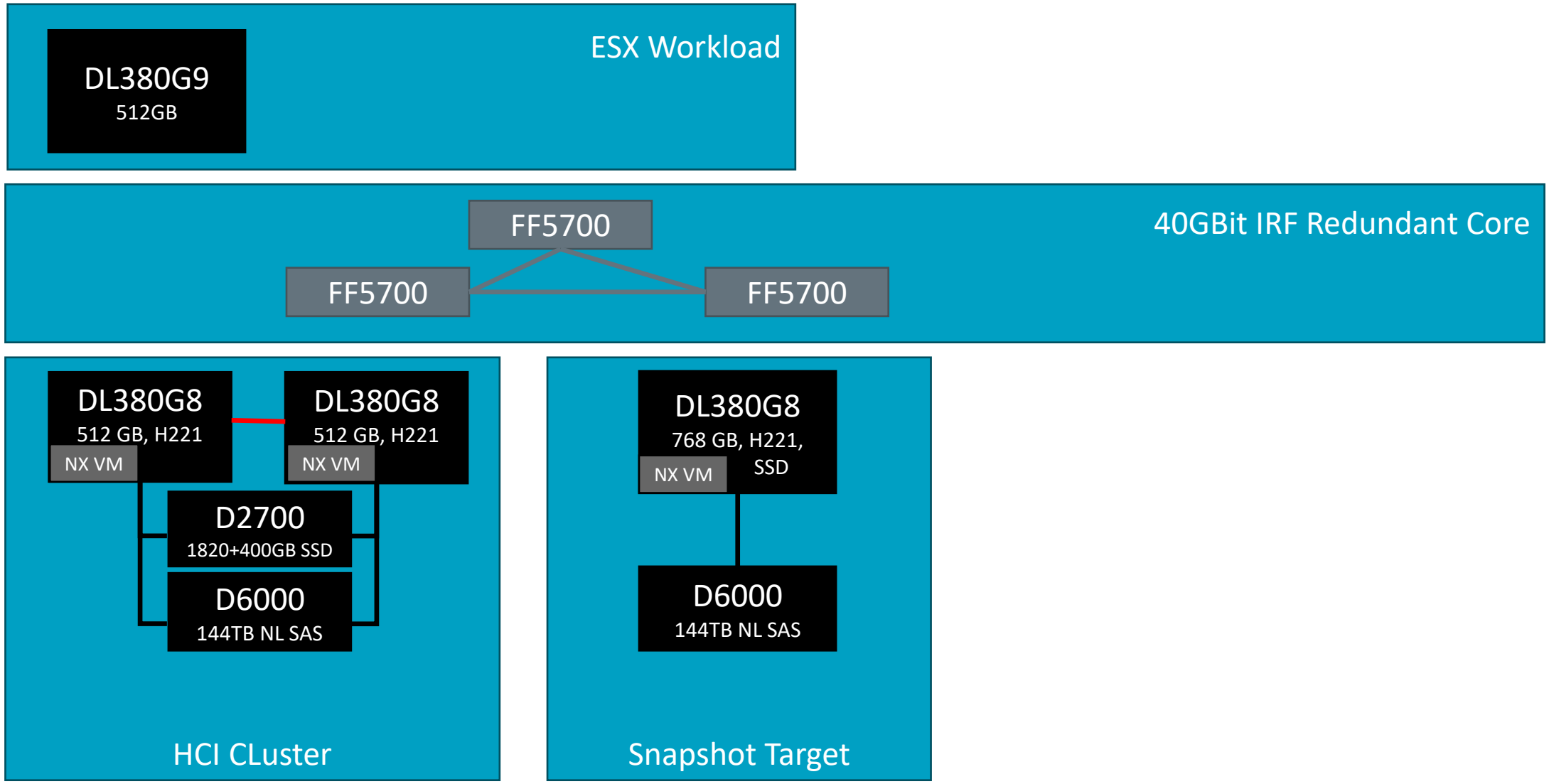

HAHN AUTOMATION GeKu Invotec KITOV SYSTEMS rethink robotics HAHN ROBOTICS HAHN ROBSHARE waldorf technik WALTHER SYSTEMTECHNIK WEMO

November `16 New VEEAM Backup

HAHNGROUP
advanced automation

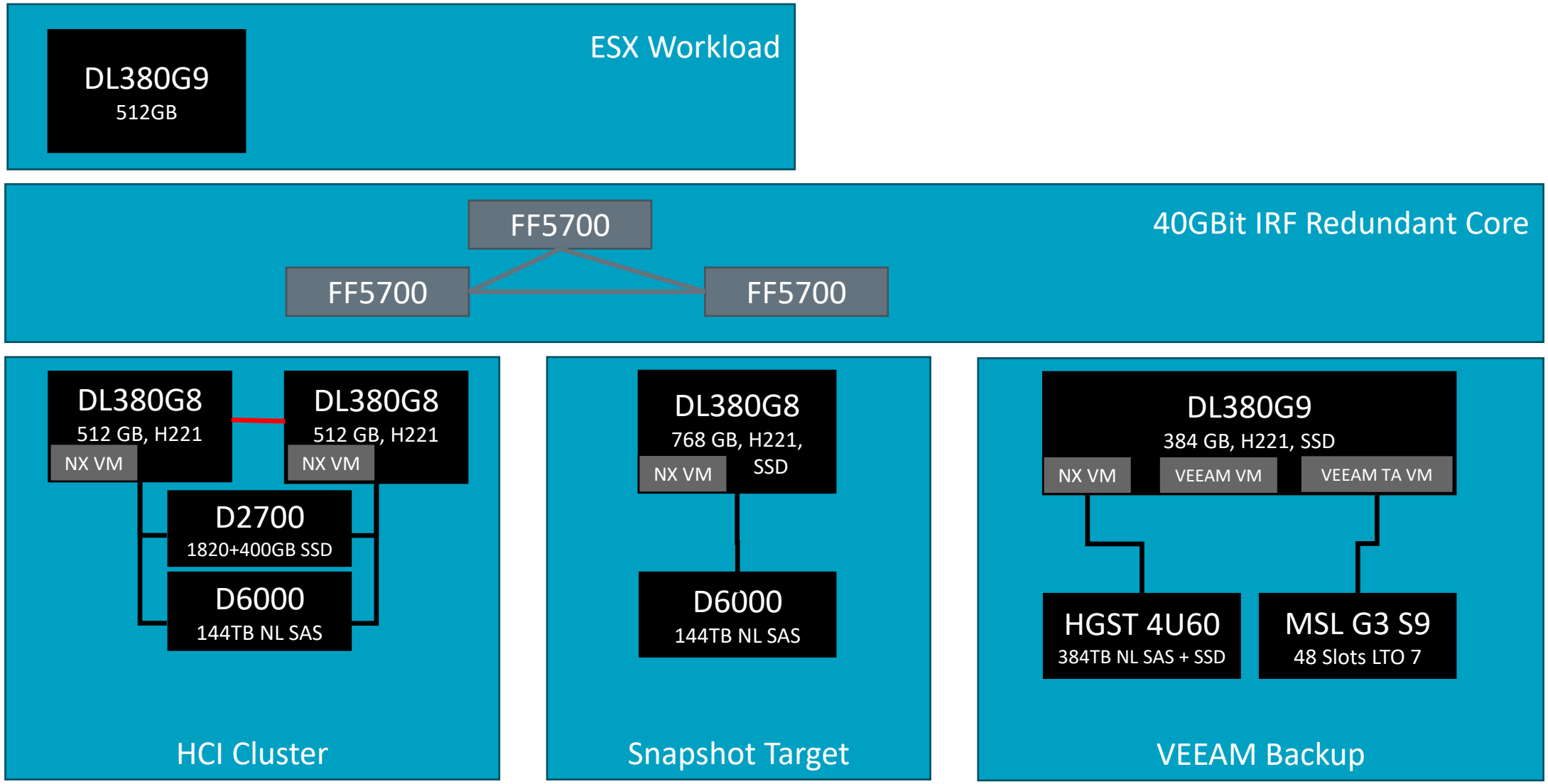

HAHN AUTOMATION GeKu Invotec KITOV SYSTEMS rethink robotics HAHN ROBOTICS HAHN ROBSHARE waldorf technik WALTHER SYSTEMTECHNIK WEMO

VEEAM Project Caveats

HAHNGROUP
advanced automation

- Integrate global WAN acceleration
- Allow isolated physical instances
- Leverage storage efficiency
- Improve performance for daily synthetic full
- Utilize hyperconverged effects for backup data streaming
- Optimize TapeOut – monthly export

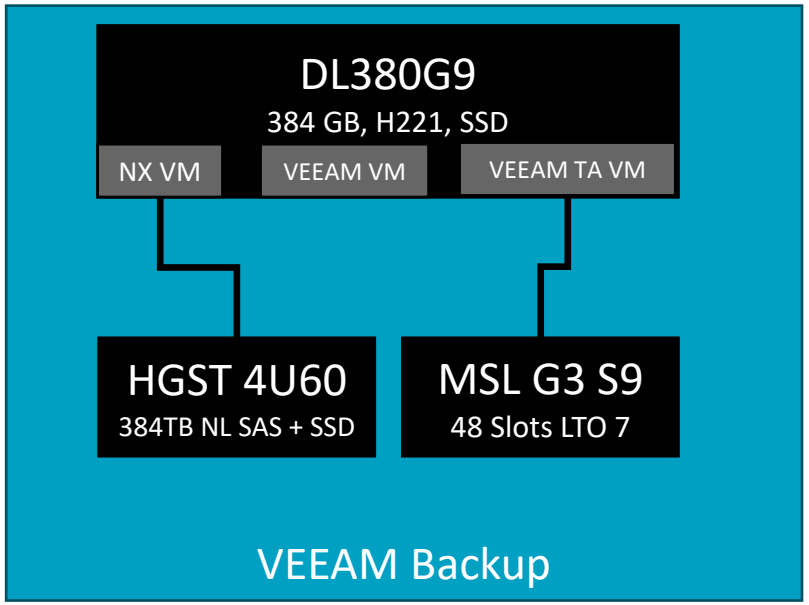

April `17 Citrix Ramp Up

HAHNGROUP
advanced automation

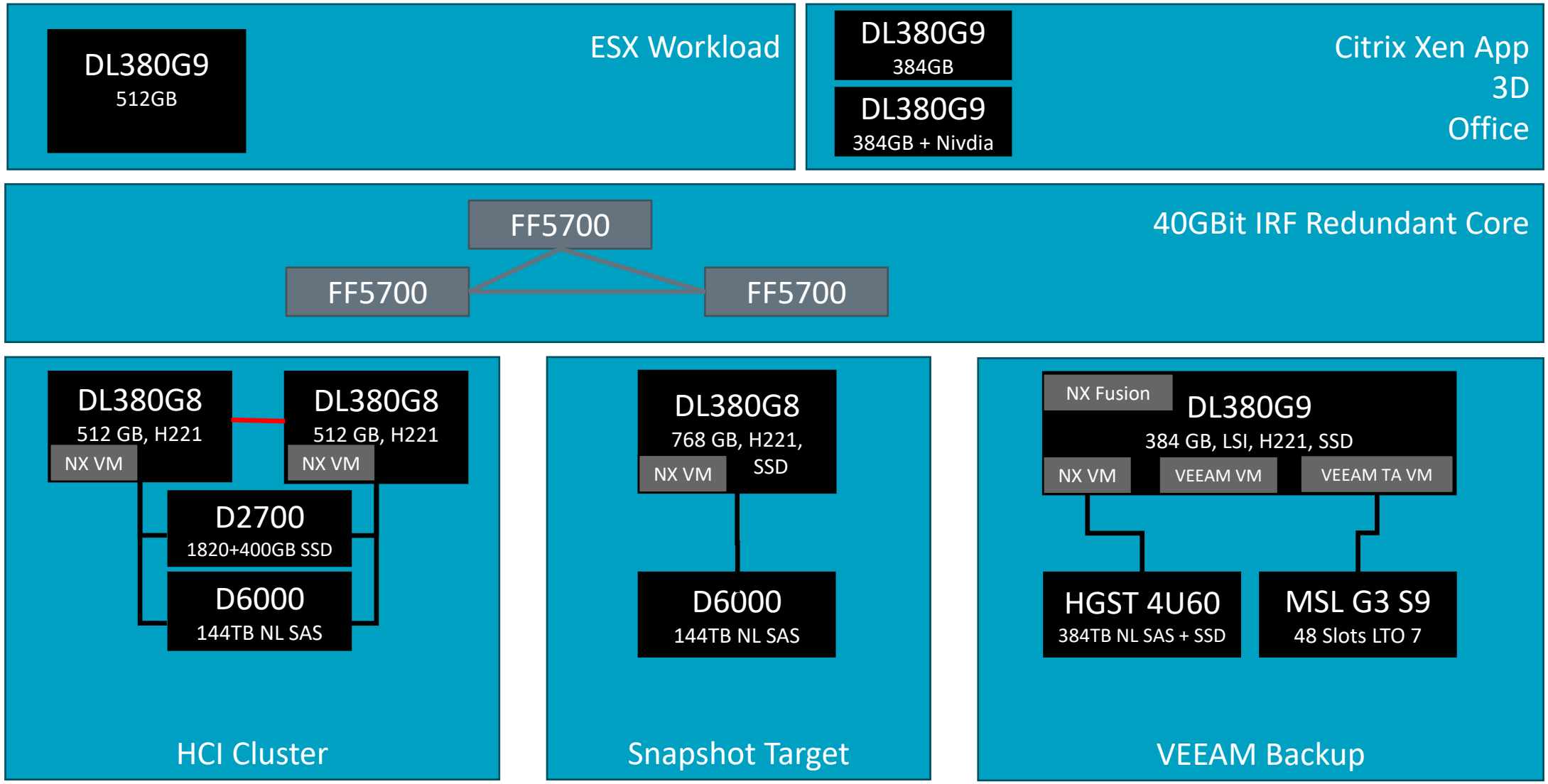

HAHN AUTOMATION GeKu Invotec KITOV SYSTEMS rethink robotics HAHN ROBOTICS HAHN ROBSHARE waldorf technik WALTHER SYSTEMTECHNIK WEMO

Citrix and VDI Caveats

HAHNGROUP
advanced automation

Virtualize mechanical design in first place

- Target virtualized long distance mechanical design (CN,MX)
- Allow future location redundant operations
- Set up scalable flexible internal and external access
- Allow scale up and scale out growth
- Non Microsoft compliant PDM System (no user/appdata - issue)

- Open office desktop perspective

January `18 Citrix End of VDI PoC

HAHNGROUP
advanced automation

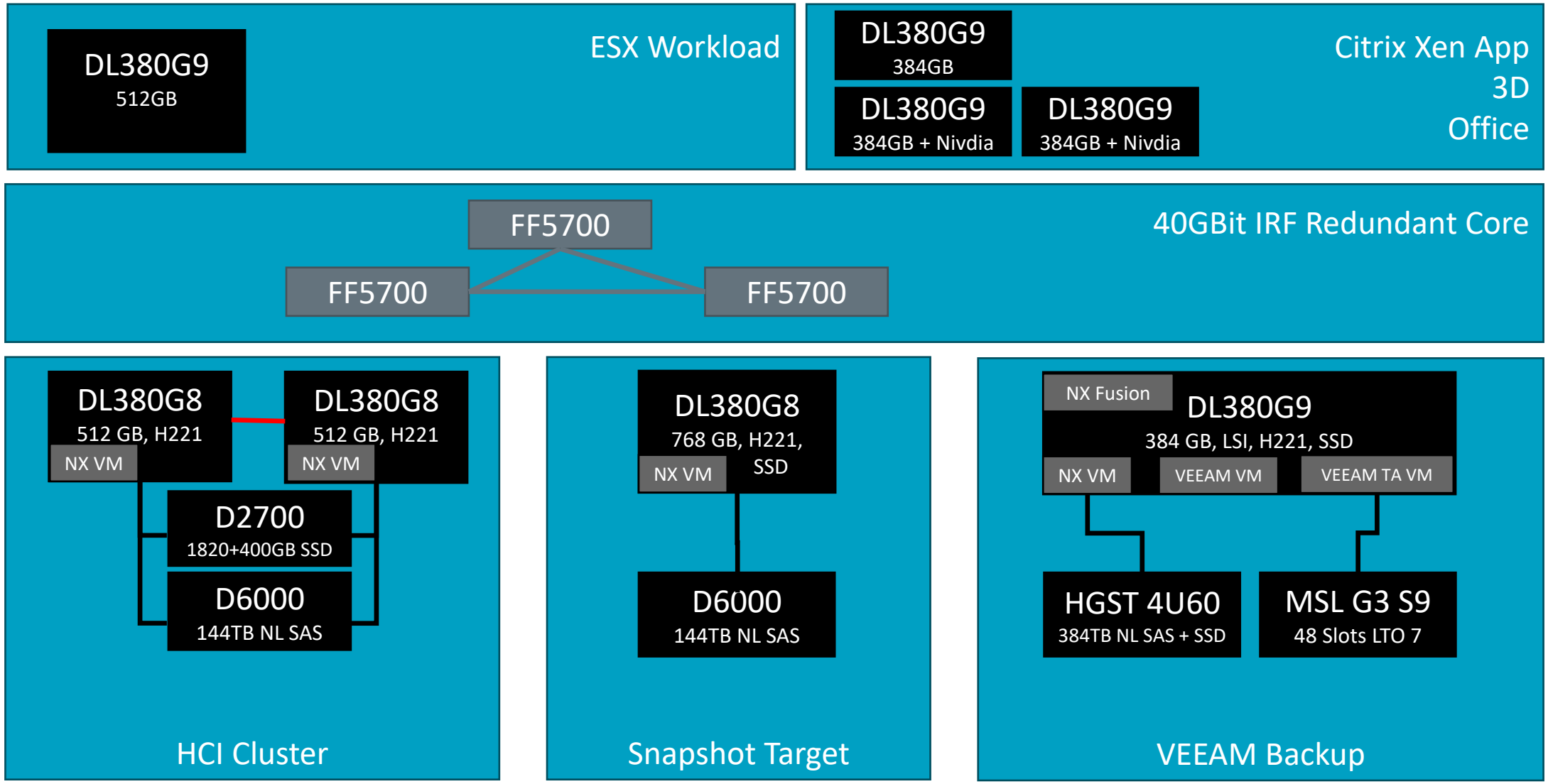

HAHN AUTOMATION · GeKu · Invotec · KITOV SYSTEMS · rethink robotics · HAHN ROBOTICS · HAHN ROBSHARE · waldorf technik · WALTHER SYSTEMTECHNIK · WEMO

Autumn `18 Initial Storage Restructuring

HAHNGROUP
advanced automation

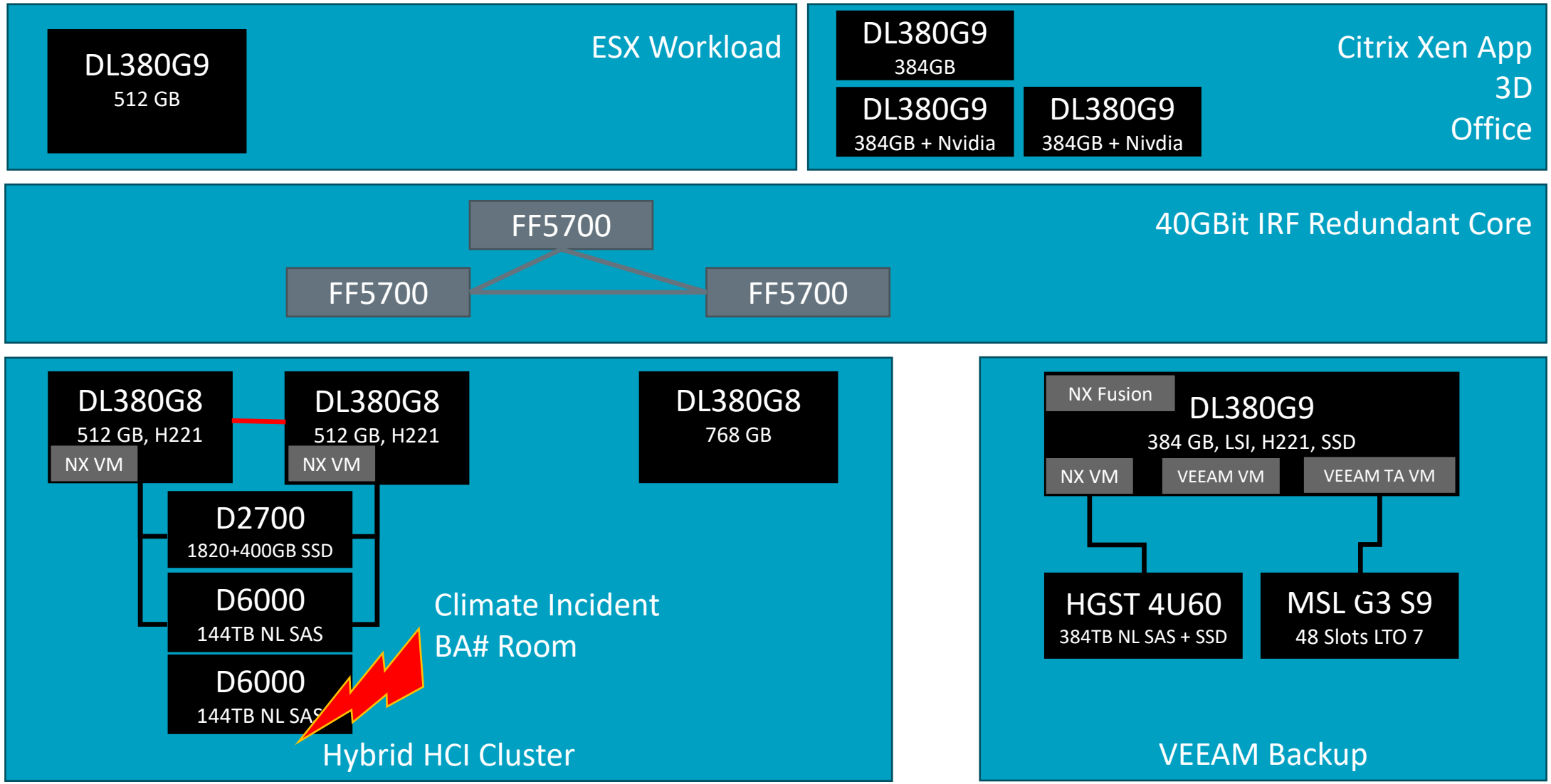

HAHN AUTOMATION GeKu Invotec KITOV SYSTEMS rethink robotics HAHN ROBOTICS HAHN ROBSHARE waldorf technik WALTHER SYSTEMTECHNIK WEMO

Winter `18-`19 Capacity Adjustments

HAHNGROUP
advanced automation

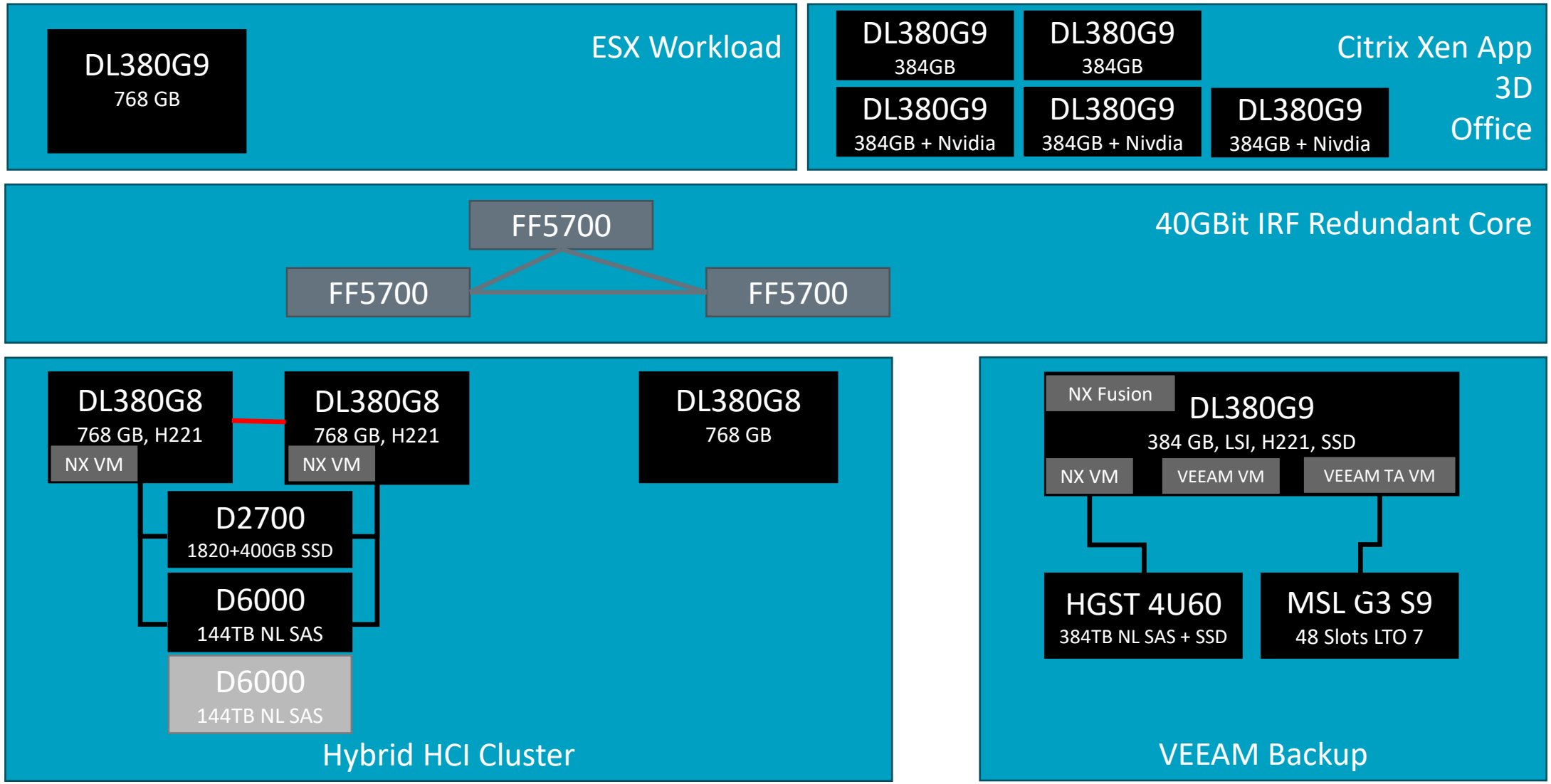

HAHN AUTOMATION GeKu Invotec KITOV SYSTEMS rethink robotics HAHN ROBOTICS HAHN ROBSHARE waldorf technik WALTHER SYSTEMTECHNIK WEMO

January `19 Storage Adjustments

HAHNGROUP
advanced automation

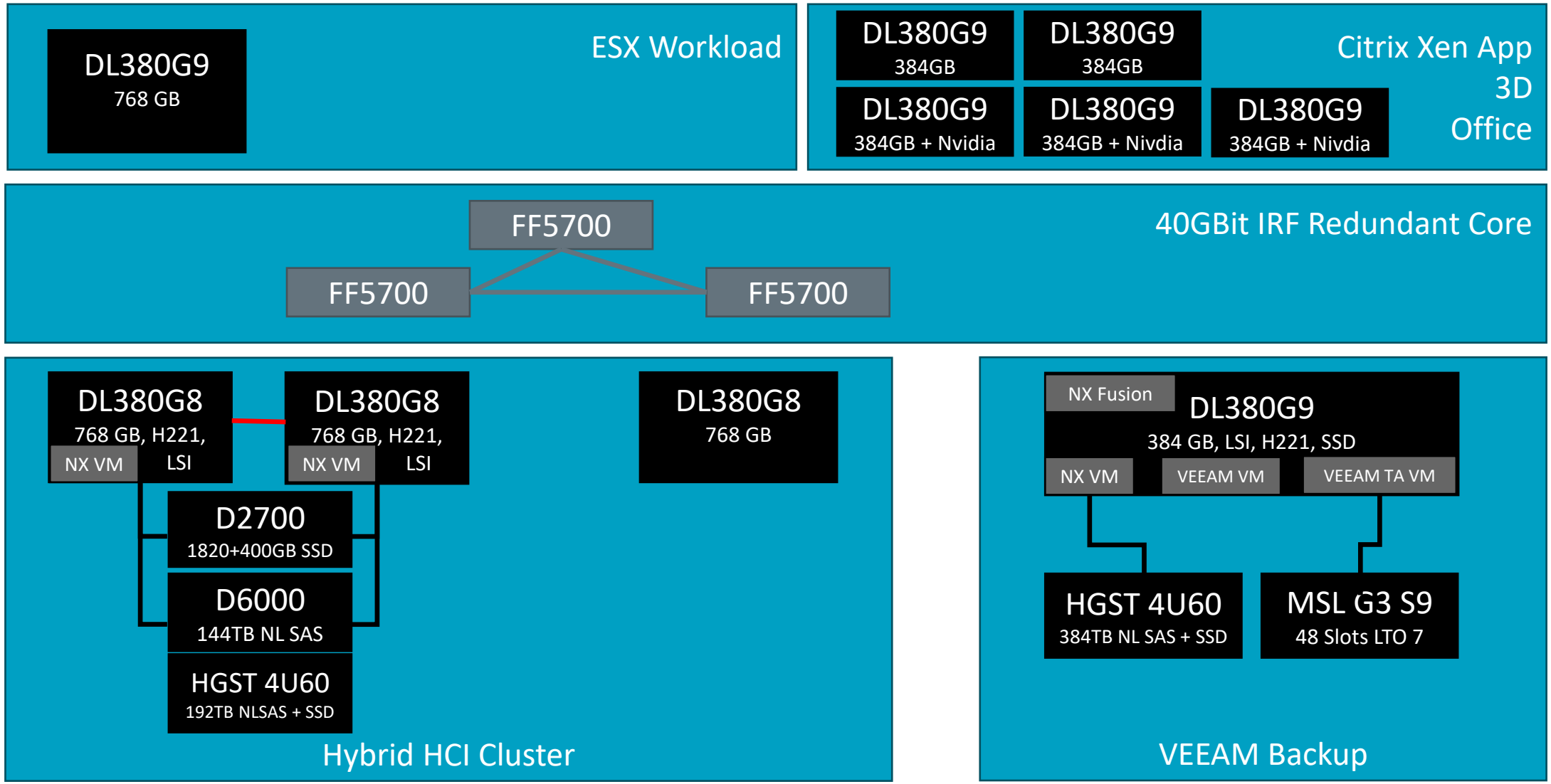

HAHN AUTOMATION GeKu Invotec KITOV SYSTEMS rethink robotics HAHN ROBOTICS HAHN ROBSHARE waldorf technik WALTHER SYSTEMTECHNIK WEMO

NexentaStor Configuration Caveats

HAHNGROUP
advanced automation

Scale out the scale up

- Achivements: 63% inline deduplication 21%-24% compression

- LSI 9300-8e for 12 G SAS @ HGST 4U60 G2
- Tripplecheck PCI Riser Boards – PCI lanes
- Separate SAS 6G and 12G
- Check SAS cabling

- Major release upgrade to Nexentastor 5.0.3 by reinstallation
- Export ZFS, reconnect HBA in new VM, Import ZFS
- Seamless release upgrade NexentaStor 5.1.2
- Pay attention to NUMA design, bad VMWare defaults in HTML5

April `19 ESX Capacity Adjustments

HAHNGROUP
advanced automation

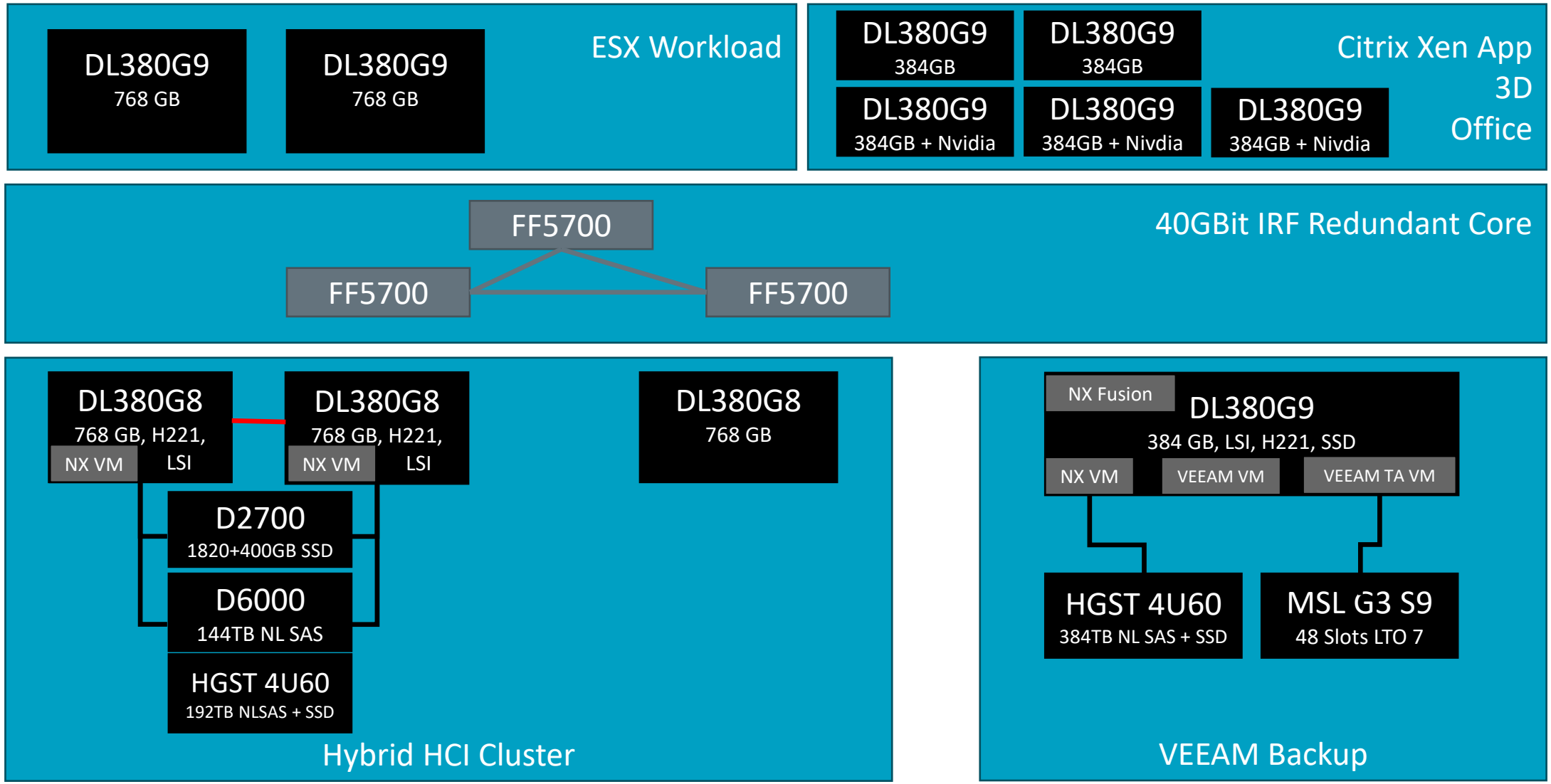

HAHN AUTOMATION GeKu Invotec KITOV SYSTEMS rethink robotics HAHN ROBOTICS HAHN ROBSHARE waldorf technik WALTHER SYSTEMTECHNIK WEMO

October `19 Core Network Exchange

HAHNGROUP
advanced automation

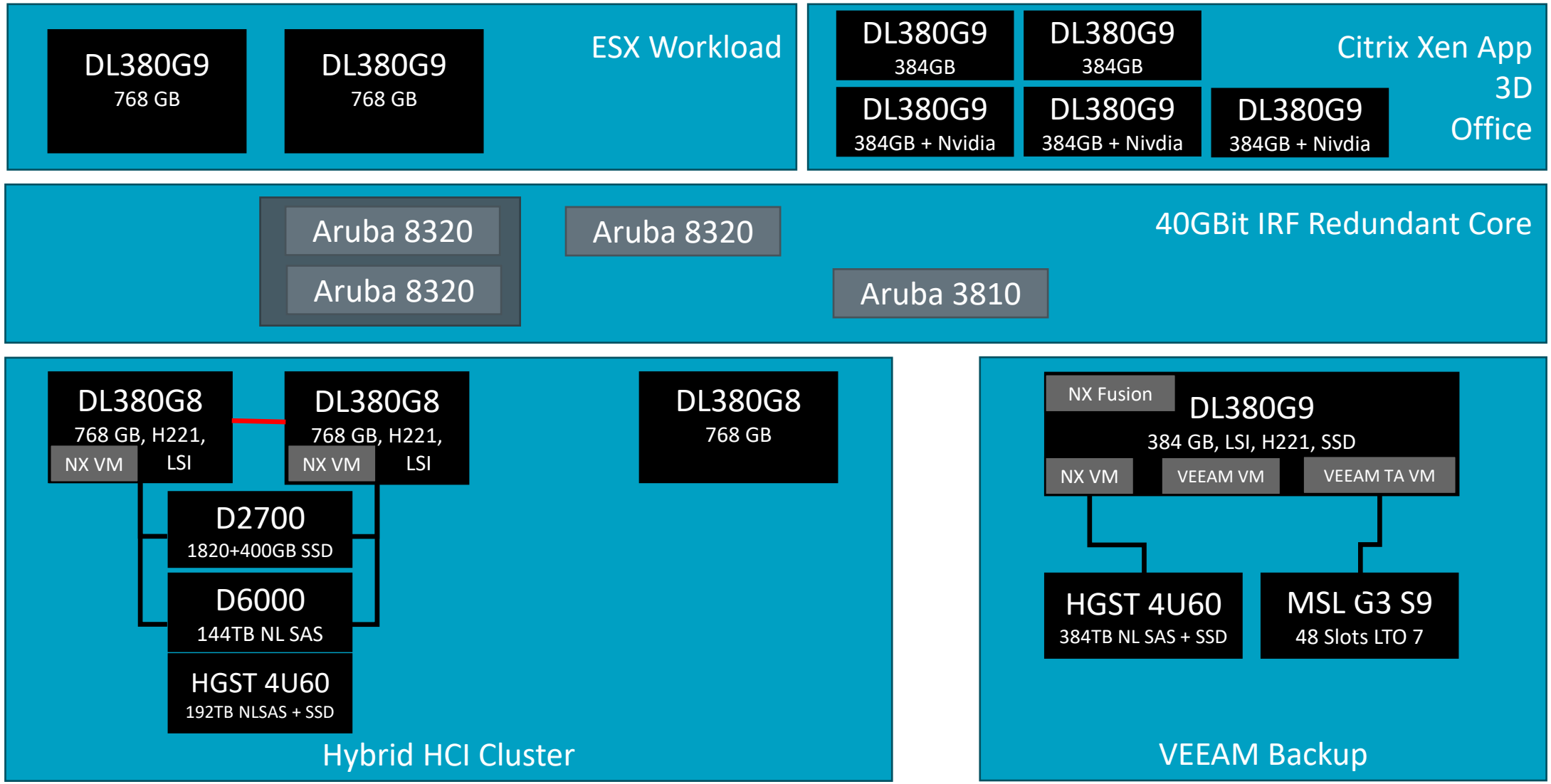

HAHN AUTOMATION · GeKu · Invotec · KITOV SYSTEMS · rethink robotics · HAHN ROBOTICS · HAHN ROBSHARE · waldorf technik · WALTHER SYSTEMTECHNIK · WEMO

Core Network Exchange

HAHNGROUP
advanced automation

- FF5700 very costeffective
- Througput perfect
- Lacking L3 options important for service routing
- Bridge to SD networking
- Allow management automatization in box

Learning From The Big Fishes!

HAHNGROUP
advanced automation

Evolution

Site Reliability Engineering google 2003

Amazon Web Service
2006

NETFLIX Streaming 2008

NIST Definition
National Institue of Standards and Technology 2011

RAD 1991 Martin

SCRUM 1995 Schwaber

Agile 2001 Schwaber/Beedle

DevOps 2008, Flickr 2010, Netflix 2012

Open Compute Project 2005 Google, 2011 Facebook

Docker Mesosphere 2013

Conclusion

HAHNGROUP
advanced automation

CAP- Theorem guarantees for only two of the three traits

Growth will happen and Agility is a must & Traditional approaches limit options for both

Software Definition is a 25+ year Evolution

Ressource Abstraction is ubiquitious

Cloud technology is nothing but Software Definition

No reason not to utilize SDx self hosted

Economy resides in Scale, technical Optimization and Standardization

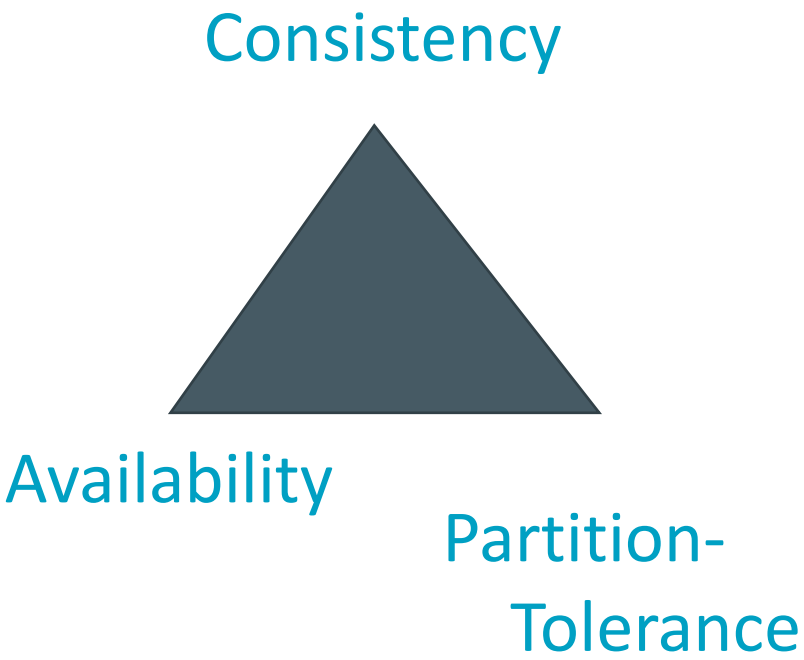

CAP Brewer- 2000 UCB – Proof 2002, Gilbert/Lynch, MIT

Frank Benke
Head of IT
f.benke@hahn.group

HAHNGROUP

advanced automation

HAHN AUTOMATION GeKu Invotec KITOV SYSTEMS rethink robotics HAHN ROBOTICS HAHN ROBSHARE waldorf technik WALTHER SYSTEMTECHNIK WEMO